Countax A2550

From 2009

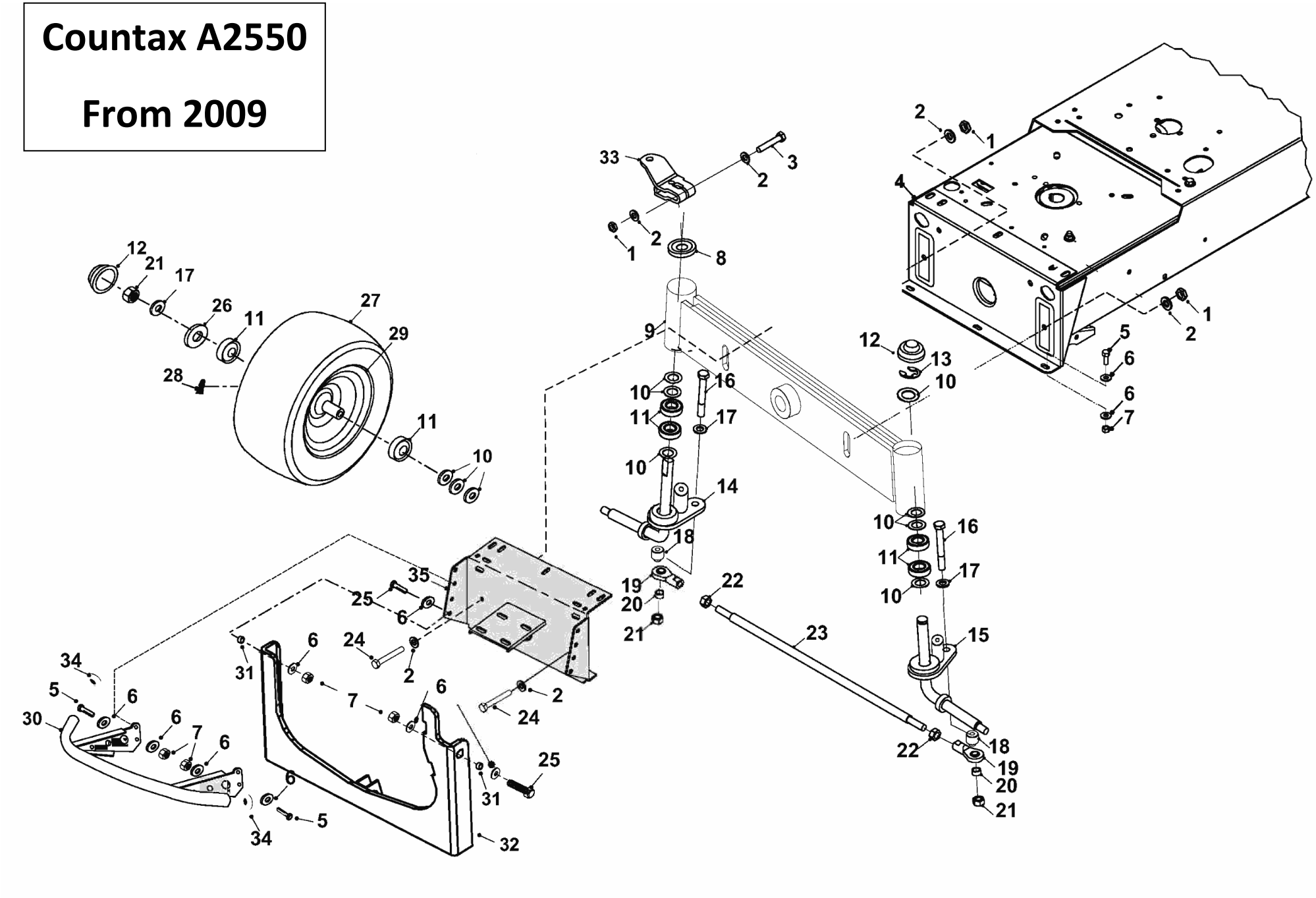

1	04886100	M10 NYLOC NUT
2	088002400	WASHER 10.8ID X 20.7OD X 2MM THK
3	01800500	OBSOLETE
4	327006300	20/50 CHASSIS
5	02825900	BOLT, M8 X 20MM
6	088003700	WASHER - M8 X 21 X 1.6
7	04920100	M8 NYLOC NUT
8	27122900	A & C330 FRONT AXLE RH SLINGER
9	327014700	AXLE BEAM, C-SERIES & 20/50
10	081258200	32 X 20 X 1MM GALV WASHER
11	10802200	FRONT WHEEL BEARING
12	14811800	HUB CAP (MOULDED)
13	07921200	19MM EXTERNAL CIRCLIP C1A1400/19
14	327178200	R/H STUB AXLE 20/50 2002 ONWARD
15	327178300	LH STUB AXLE WELDED ASSY, 2002 ONWARD
16	019478500	M12 X 80MM BOLT
17	088003600	WASHER - M12 X 24 X 1.6
18	183012700	20/50 STEERING LINK ROD SPACER
19	108728000	M12 ROD JOINT 20/50

20	183012800	20/50 STEERING LINK ROD SPACER
21	049381100	M12 NYLOC NUT
22	049381200	NUT M12
23	183012900	20/50 TRACK ROD
24	018002400	M10 X 55 HEX HEAD BOLT
25	02826000	BOLT M8 X 25MM
26	30128100	HUB CAP WASHER, FRONT WHEEL
27	198000600	20/50 FRONT TYRE, 16X6.50 8NHS
28	14889200	WHEEL VALVE
29	198000700	20/50 FRONT WHEEL RIM
30	327028000	NEW PART NO: 327807600 TRACTOR BULLBAR ASSY
31	31302800	SPACER 7MM X 5/16ID
32	327365700	2005 DECK TENSION CRADLE WELDED ASSY
33	327173401	OBSOLETE
34	148014400	STAINLESS STEEL BULLBAR PLASTIC END CAP
35	327014600	UNIVERSAL FRONT AXLE PLATE ASSEMBLY

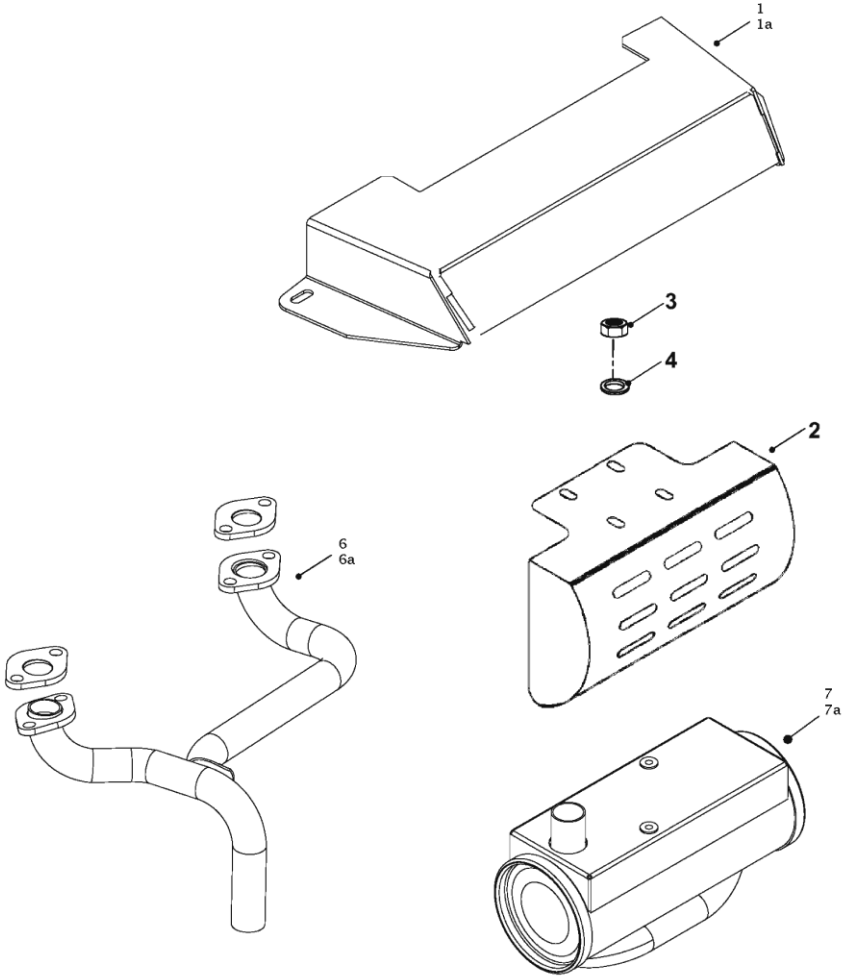
1
1a
3
4
2
6
6a
7
7a

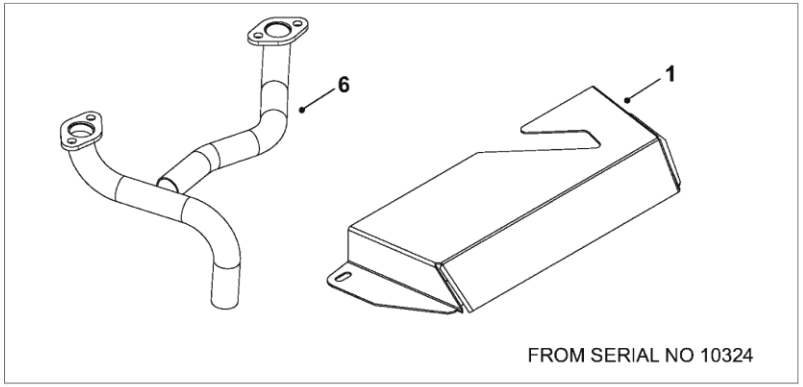
6
1
FROM SERIAL NO 10324

1	30840600	A2550 EXHAUST HEAT SHIELD
1A	541065500	OBSOLETE
2	307199700	2004 COUNTAX HEATSHIELD
3	04822300	FULL NUT HEAX M8 Z/P
4	088003700	WASHER - M8 X 21 X 1.6
6A	327887800	KAWASAKI 26HP EXHAUST PIPE ASSEMBLY
6	32958200	A2550 EXHAUST WELDED ASSEMBLY
7	401007001	EXHAUST, C500H, C600H, C800H, C600.
7A	401008400	KAWASAKI 26HP EXHAUST BOX ASSEMBLY

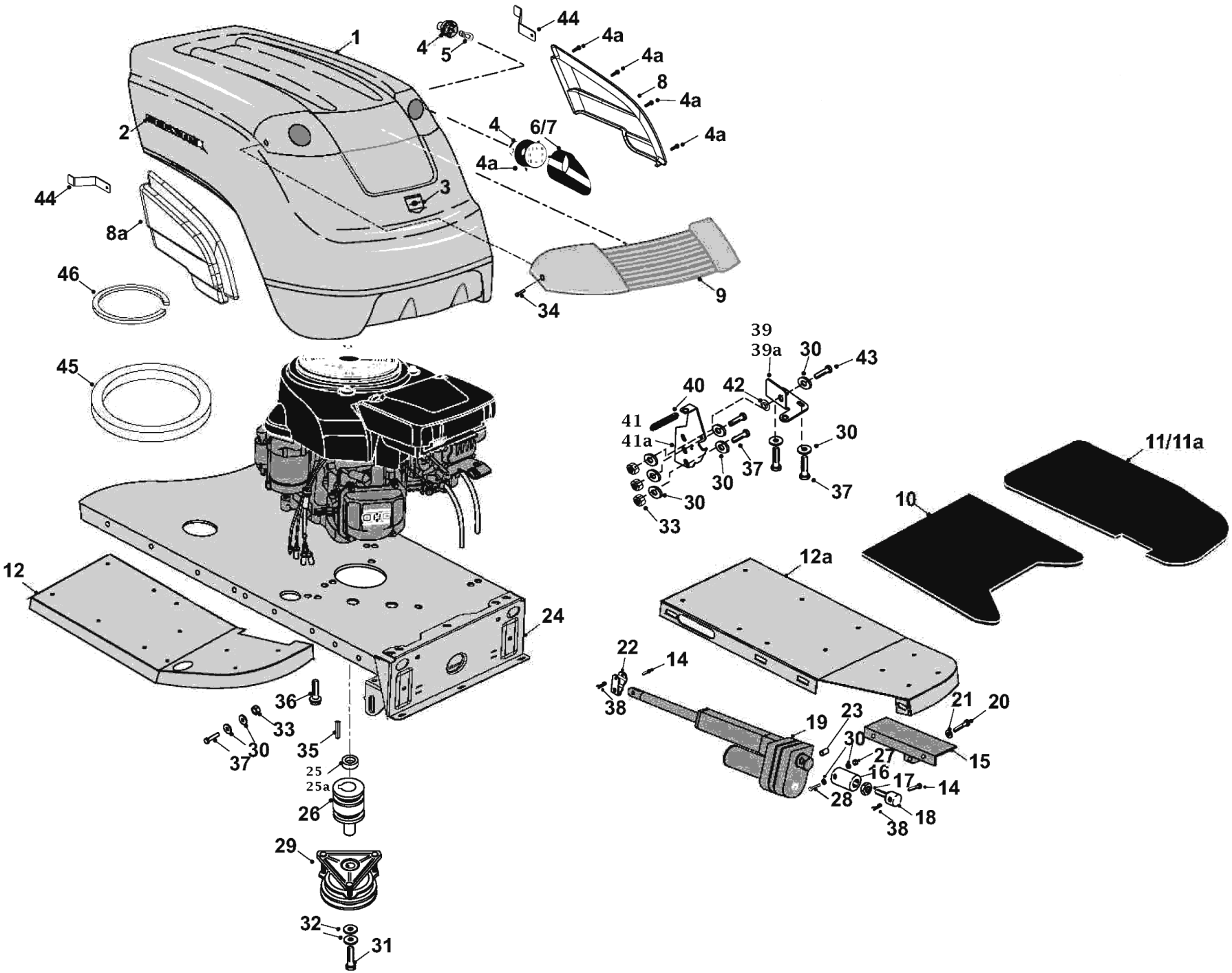
1
2
3
4
5
44
4a
8
6/7
8a
46
45
34
9
39
39a
30
43
40
42
41
41a
37
33
11/11a
10
12
12a
24
22
14
38
36
35
25
25a
26
29
32
31
19
23
21
20
15
27
16
17
28
18

1	405007400	2002 COUNTAX BONNET C800
2	359505800	NEW PART NO: 359010100 ALLUMINIUM COUNTAX BADGE
3	359513400	DISCONTINUED
4A	148014900	FIR TREE FIXING C SERIES HEAD LIGHTS
4	448008400	LIGHT - C SERIES 2002, 2BA 008 221-007
5	448008500	BULB - C SERIES 2002 , PY21W
6	148013500	C SERIES LH LIGHT CAN -2002
7	148013600	C SERIES RH LIGHT CAN -2002
8A	149550800	C SERIES SIDE PANEL 2008 RH
8	149550900	C SERIES SIDE PANEL 2008 LH
9	148013400	C SERIES BONNET LENS 2002
10	148007400	YR 2000 2050 CENTRE RUNNING BOARD MAT
11	148007200	YR 2000 2050 LH RUNNING MAT
11A	148007300	YR 2000 2050 RH RUNNING MAT
12A	321122400	20/50 L/H RUNNING BOARD
12	321122500	20/50 R/H RUNNING BOARD
14	189504800	10MM ACTUATOR PIN
15	327363500	LA12 ACTUATOR MOUNTING BRACKET
16	183028100	UNIVERSAL ACT ATTACHMENT BODY - AUG 03

17	049381200	NUT M12
18	187184900	DECK LIFT ACTUATOR ADJUSTMENT SCREW
19	449664100	X SERIES HIWIN ACTUATOR
20	018002400	M10 X 55 HEX HEAD BOLT
21	088002400	WASHER 10.8ID X 20.7OD X 2MM THK
22	307192400	UNIVERSAL DECK LIFT ARM - HIWIN ACTUATOR
23	183023500	LA10 FAST LIFT ACTUATOR BUSH
24	327006300	20/50 CHASSIS
25	183028300	HANBRAKE C SERIES ONLY ENG PULLEY SPACER
25A	189520100	OBSOLETE
26	32957200	KAWASAKI ENGINE CLUTCH PULLEY WELD ASSY
27	04822300	FULL NUT HEAX M8 Z/P
28	018003200	M8X40MM BRIGHT ZINC PLATE BOLT
29	44815200	ELECTRIC CLUTCH 20/50
30	088003700	WASHER - M8 X 21 X 1.6
31	01853300	BOLT 7/16 X 6IN
32	18312200	ENGINE PULLEY CAP
33	04920100	M8 NYLOC NUT
34	018005100	M4 X 16 SCKT HD COUNTER SUNK SCREW S/C
35	09853401	KEY-1/4SQ X 1 1/4 AMERICAN SPEC ROUNDED

36	01848700	3/8UNC X 1 1/4 BOLT BZP
37	02825900	BOLT, M8 X 20MM
38	06861500	3/32" X 1/2" SPLIT P
39	301136300	MK3 C SERIES BONNET HINGE BRKT - 2002
39A	301136400	MK3 C SERIES BONNET HINGE BRKT - 2002
40	25805200	SPRING
41	301136500	LH BONNET STOP MK3 PLASTIC BONNET
41A	301136600	RH BONNET STOP MK3 PLASTIC BONNET
42	183529500	C-SERIES DECK LIFT PIVOT SPACER
43	02826000	BOLT M8 X 25MM
44	308419300	C800 SIDE PANNEL SUPPORT BRACKET 2008
45	149549100	KAWASAKI ENGINE SEAL RING
46	148015000	RUBBER TRIM, BONNETS & A-SERIES PGC

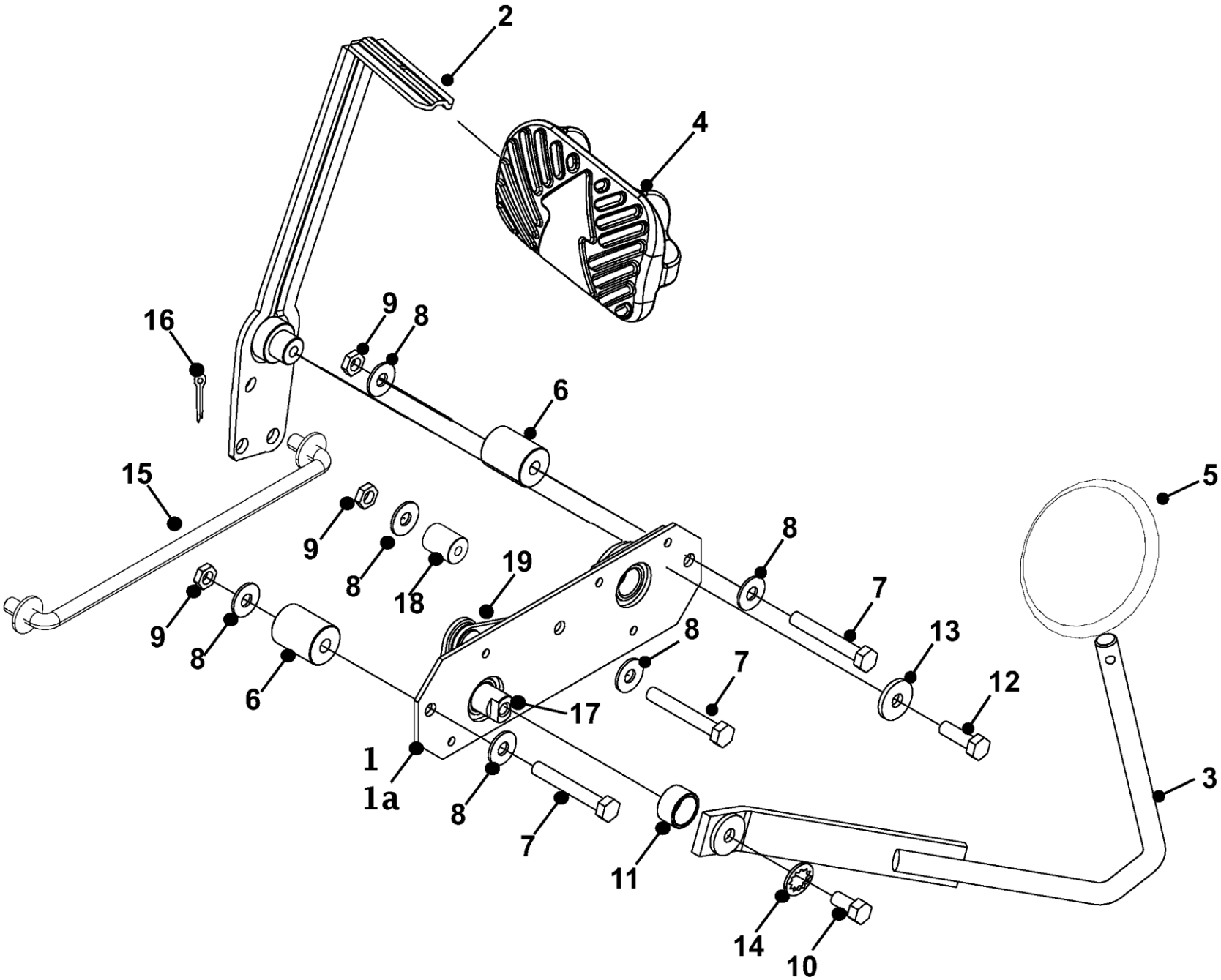
2
4
16
9
8
6
15
5
9
8
19
18
8
7
13
12
9
8
6
8
7
17
1
1a
8
7
11
3
14
10

1A	301143000	TRANSMISSION CASSETTE SIDE PLATE
1	409427400	NEW PART NO: 409429500 PEDAL ASSY
2	32952200	C/WW FORWARD PEDAL WELDED ASSEMBLY
3	328958000	JCB/K18/50 REVERSE PEDAL WELDED ASSEMBLY
4	148013700	C SERIES FWD LARGE PEDAL RUBBER - 2002
5	183014800	RIDER / C SERIES FOOT PEDAL DISC
6	187186200	2050 CASSETTE/CHASSIS SPACER
7	018003500	NEW PART NO: 018001800 BOLT
8	088003700	WASHER - M8 X 21 X 1.6
9	04920100	M8 NYLOC NUT
10	028001000	M8 X 16 M/SCREW
11	183011000	UNIVERSAL PEDAL CASSETTE SPACER 10MM
12	02826000	BOLT M8 X 25MM
13	089418600	WASHER M8 X 25 X 3 UNPLATED
14	088001700	LOCK WASHER
15	327362701	NEW PART NO: 327362700 ROD ASSY
16	06823300	SPLIT PIN 1 X 1/8 (SNOWBLADE)
17	327361100	2002 CASSETTE REVERSE PEDAL SPINDLE ASSY
18	187185600	2002 CASSETTE CHASSIS SPACER
19	307194300	2003 PEDAL CASSETTE LINK

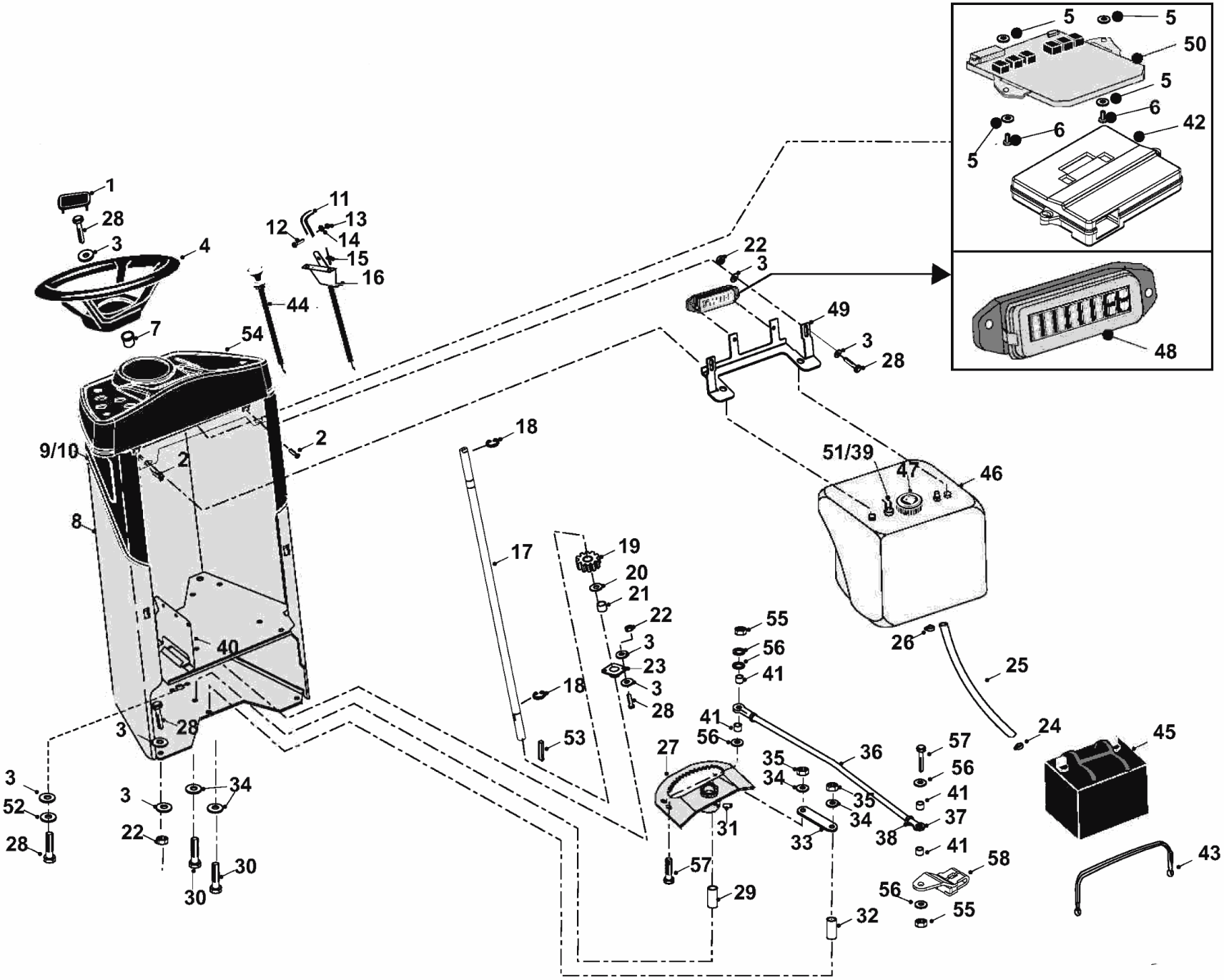

1
28
3
4
7
11
12
13
14
15
16
44
54
9/10
2
2
8
40
3
28
3
52
28
3
22
34
30
30
18
17
18
53
19
20
21
22
3
23
3
28
27
31
57
29
55
56
41
41
56
35
34
36
35
34
33
32
38
57
56
41
37
41
58
56
55
26
25
24
45
43
22
3
49
3
28
51/39
47
46
5
5
50
5
6
6
42
5
48

1	14938700	NEW PART NO: 148015200 STEER WHEEL CAP
2	019479500	M5 X 16MM FLANG BUTT HD SCKT DRIVE SCREW
3	088003700	WASHER - M8 X 21 X 1.6
4	14928200	STEERING WHEEL '96
5	08952500	NEW PART NO: 01539100 PLT-CLAMPING
6	029427000	8 X 5/8" POZI PAN STEEL HILO SCRE
7	14801800	NEW PART NO: 149588800 STEERING COLUMN UPPER BUSH
8	327807101	C SERIES CONSOL WELDED ASSEMBLY 2008
9	148986300	C,D,A SERIES KNEE PAD RH
10	148986200	C, D,A, SERIES KNEE PAD LH
11	14810400	CONTROL KNOB (THROTTLE CABLE)
12	02826300	M4 X 12 POZI PAN S/S ZINC PLATED
13	04826400	M4 NYLOC T
14	08826200	M4 FORM A WASHER BZP
15	12824400	POP RIVET 5MM X 10MM
16	528004600	W-TWIN
17	31328401	OBSOLETE
18	07823800	CIRCLIP 5/8 EXTERNAL
19	213112100	STEERING GEAR 20/50 /C-SER/ WW/K18/50

20	08822700	WASHER 5/8 T3 LP
21	18401500	STEERING ROD SPACER
22	04850600	NEW PART NO: 04920100 M8 NYLOC NUT
23	10801700	COLUMN LOWER BEARING
24	11867100	HOSE CLIP (SPRING TYPE)
25	14803200	FUEL FEED PIPE 80059
26	11856900	JUBILEE CLIP (FUEL TANK HOSE)
27	327015800	STEERING QUADRANT
28	02825900	BOLT, M8 X 20MM
29	31337400	STEERING RACK PIVOT
30	018005300	M10 X 65MM HEX HEAD BOLT - BZP
31	11808600	GREASE NIPPLE
32	31337500	STEERING SUPPORT BOSS
33	27102400	STEERING LINK PLATE
34	088002400	WASHER 10.8ID X 20.7OD X 2MM THK
35	04886100	M10 NYLOC NUT
36	318963700	A25/50 STEERING LINK ROD
37	108728000	M12 ROD JOINT 20/50
38	049381200	NUT M12
39	149510900	DISCONTINUED

40	301139801	OBSOLETE
41	183016900	TRACK ROD END SPACER 12.7OD X 10ID X 7
42	149552000	PCB CASE 2 PART TO FIT 2008 DASH ONLY
43	149499500	BATTERY STRAP
44	RCL29005800	NEW PART NO: RCL290058-00 CHOKE CABLE
45	458141200	NEW PART NO: 458141201 SEALED BATTERY
46	148015400	FUEL TANK WITH HOLE FOR GUAGE 03
47	52803100	FUEL TANK CAP
48	301139400	C/X SERIES FUSEBOX HOLDER
49	307187400	2002 FUEL TANK AND FUSE HOLDER BRACKET
50	448017005	CAXW &4WD MAIN PCB C & A 2008 (CU32)
51	449665300	FUEL LEVEL SENDER 208MM LONG 16MM HOLE
52	088003800	M8 INTERNALLY SERRATED SHAKEPROOF WASHER
53	09823900	KEY NO 61
54	148986100	DASHBOARD 2008
55	049381100	M12 NYLOC NUT
56	088003600	WASHER - M12 X 24 X 1.6
57	019478800	M12 X 60MM BOLT (ZINC)
58	327173401	OBSOLETE

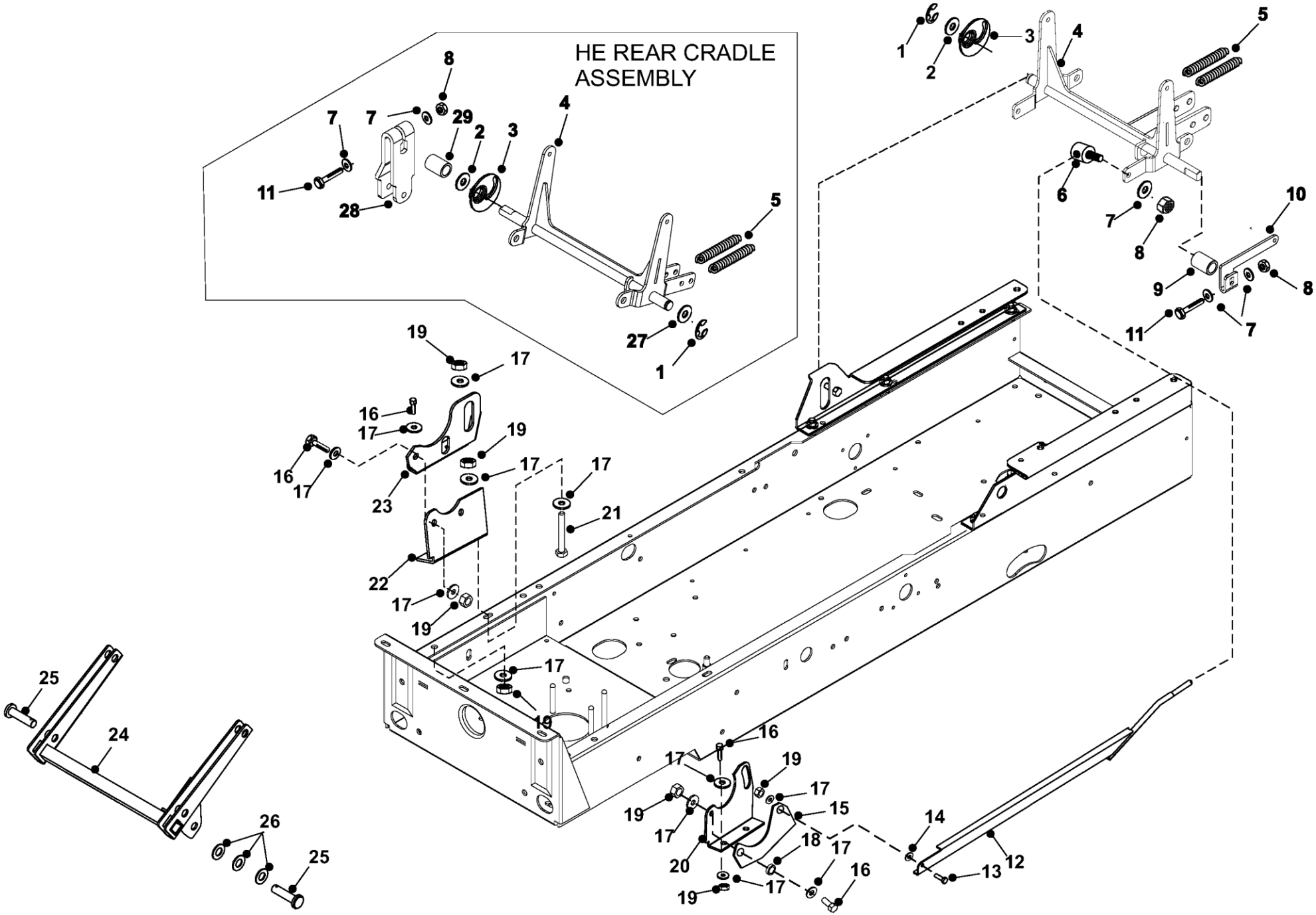
HE REAR CRADLE ASSEMBLY
1
2
3
4
5
6
7
8
9
10
11
12
13
14
15
16
17
18
19
20
21
22
23
24
25
26
27
28
29

1	14938700	NEW PART NO: 148015200 STEER WHEEL CAP
2	019479500	M5 X 16MM FLANG BUTT HD SCKT DRIVE SCREW
3	088003700	WASHER - M8 X 21 X 1.6
4	14928200	STEERING WHEEL '96
5	08952500	NEW PART NO: 01539100 PLT-CLAMPING
6	029427000	8 X 5/8" POZI PAN STEEL HILO SCRE
7	14801800	NEW PART NO: 149588800 STEERING COLUMN UPPER BUSH
8	327807101	C SERIES CONSOL WELDED ASSEMBLY 2008
9	148986300	C,D,A SERIES KNEE PAD RH
10	148986200	C, D,A, SERIES KNEE PAD LH
11	14810400	CONTROL KNOB (THROTTLE CABLE)
12	02826300	M4 X 12 POZI PAN S/S ZINC PLATED
13	04826400	M4 NYLOC T
14	08826200	M4 FORM A WASHER BZP
15	12824400	POP RIVET 5MM X 10MM
16	528004600	W-TWIN
17	31328401	OBSOLETE
18	07823800	CIRCLIP 5/8 EXTERNAL
19	213112100	STEERING GEAR 20/50 /C-SER/ WW/K18/50
20	08822700	WASHER 5/8 T3 LP

21	18401500	STEERING ROD SPACER
22	04850600	NEW PART NO: 04920100
23	10801700	COLUMN LOWER BEARING
24	11867100	HOSE CLIP (SPRING TYPE)
25	14803200	FUEL FEED PIPE 80059
26	11856900	JUBILEE CLIP (FUEL TANK HOSE)
27	327015800	STEERING QUADRANT
28	02825900	BOLT, M8 X 20MM
29	31337400	STEERING RACK PIVOT

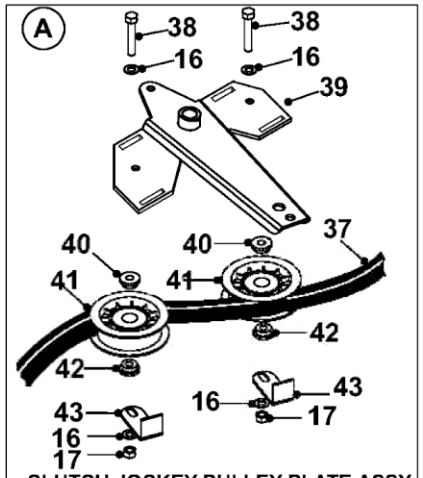

CLUTCH JOCKEY PULLEY PLATE ASSY

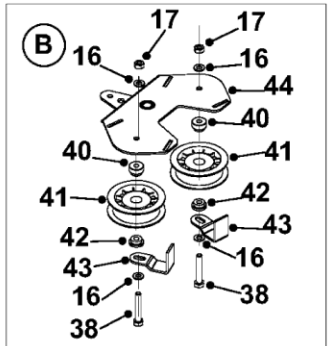

JOCKEY PULLEY ASSY

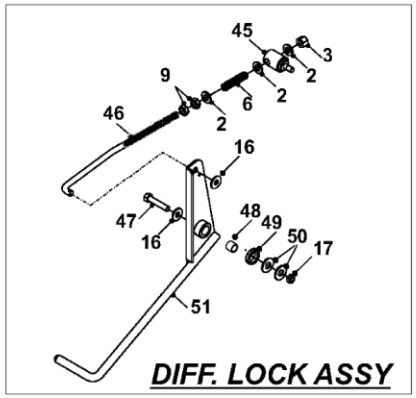

DIFF. LOCK ASSY

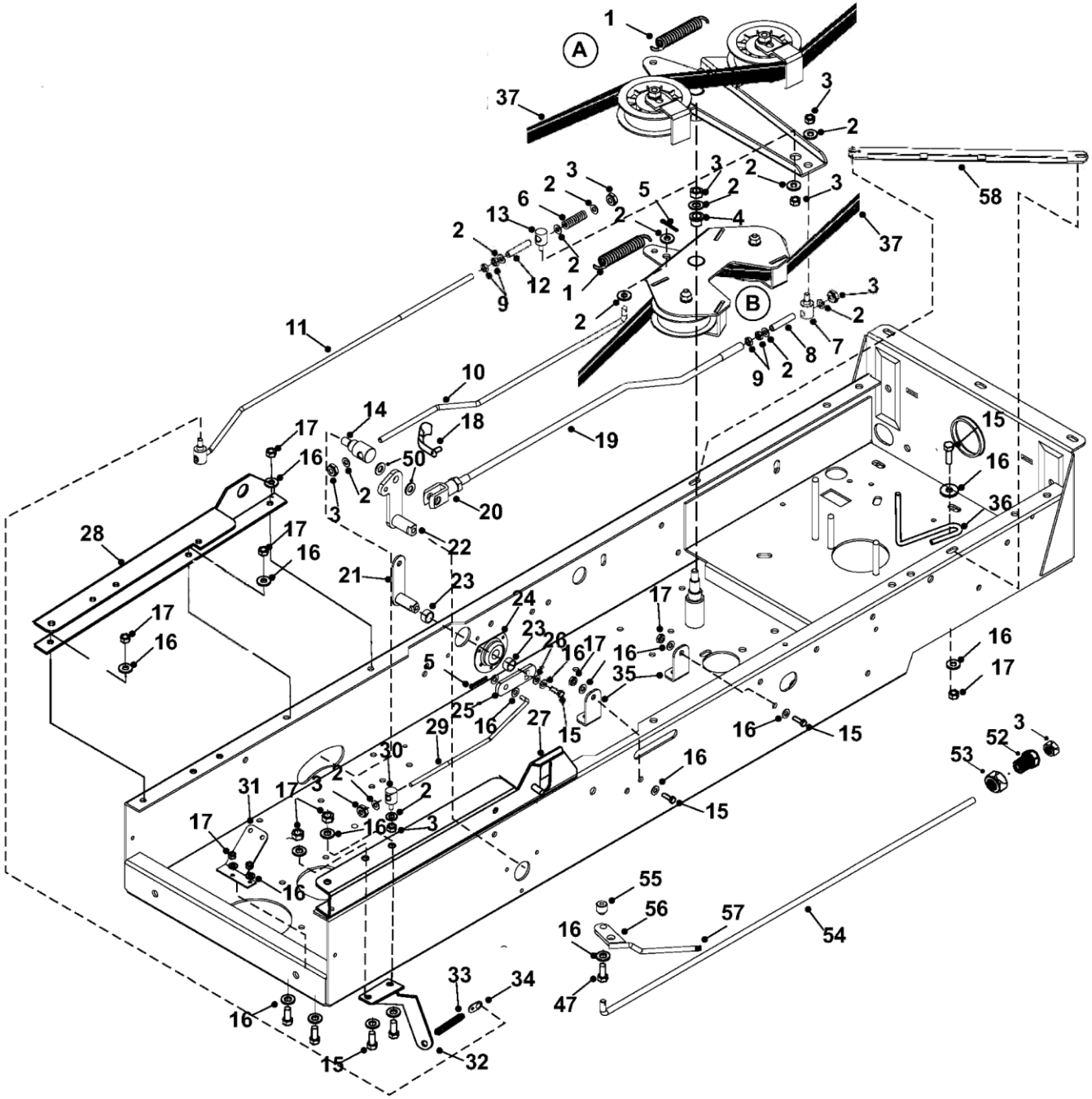

1	25849600	BELT TENSION SPRING
2	088002400	WASHER 10.8ID X 20.7OD X 2MM THK
3	04886100	M10 NYLOC NUT
4	18341000	RIDER SINTERED BUSH 16.64LX15.88BX2.36
5	06823300	SPLIT PIN 1 X 1/8 (SNOWBLADE)
6	259405100	20/50 COMP BRAKE ROD SPRING
7	189514100	C SERIES 4WD PARK BRAKE ROD TRUNNION
8	174008900	MK3 PARK BRAKE ENGAGE ROD SLEEVE
9	04872100	M10 LOCKNUT
10	313010800	20/50 PTO ROD,**CHECK WITH DS OR DW**
11	327022302	NEW PART NO: 327022300 FOOT BRAKE ROD
12	183019100	20/50 BRAKE ROD TUBE
13	183019000	20/50 JOCKEY PLATE TRUNNION
14	18318000	RIDER DECK BRAKE TRUNNION
15	02826000	BOLT M8 X 25MM
16	088003700	WASHER - M8 X 21 X 1.6
17	04920100	M8 NYLOC NUT
18	108000500	10MM SPRING PIN SHORT
19	318963801	A2050 CLUTCH LINK ROD TO JOCKEY PLATE
20	108000600	10MM X 1.5 CLEVIS SHORT

21	327022200	20/50 BRAKE LINK BRACKET
22	328957000	HANDBRAKE BEARING LINK SHAFT WELDED ASSY
23	183011000	UNIVERSAL PEDAL CASSETTE SPACER 10MM
24	301048100	TRACTOR PEDAL CASSETTE BEARING HOUSING
25	307197700	2004 METRIC FWD / REV LINK PLATE
26	08819800	WASHER 5/16ID X 1OD HD
27	327009300	20/50 L/H T/AXLE MOUNTING BRACKET
28	301041700	20/50 R/H T/AXLE MOUNTING BRACKET
29	313022002	NEW PART NO: 313022000 METRIC ROD
30	187186500	D1850,JCB,K1850 & 2050 FWD & REV TRUN 04
31	307198601	OBSOLETE
32	301119600	20/50 SPRING PLATE (PARK BRAKE)
33	25813801	SAFETY SWITCH SPRING
34	301122000	A2050 SPRING TAG
35	303071400	NEW PART NO: 307022200 BRAKE SWITCH
36	313006200	20/50 TRANSMISSION FRONT BELT GUIDE
37	228001500	USE SUPERSESSION 228001501
38	018001800	BOLT M8 X 50MM
39	321122300	D1850/2050 CLUTCH JOCKEY PLATE ASSY
40	31351100	SWEEPER JOCKEY CAP

41	20811500	PTO JOCKEY PULLEY (CAPITOL)
42	18831600	SPACER JOCKEY WHEEL
43	307187100	BELT KEEPER
45	183020200	2050 DIFF LOCK PEDAL TRUNNION
47	02941000	BOLT M8 X 45MM (VAC)
48	52936700	OILITE BUSH - 5/8OD X 1/2ID X 1/2LONG
49	31306200	PTO END SPACER
50	088004500	M10 X 24 X 2 TL WASHER
51	321122200	20/50 PEDAL PLATE ASSY
52	189507400	DECK TENSION CRADLE ADJUSTER NUT
53	049382500	M16 HALF NUT BZP
54	313513701	C SERIES DECK TENSION ROD, BAR COMPONENT
55	18317400	DECK HEIGHT PIVOT BOSS
56	321122800	NEW PART NO: 32958300 DECK TENSION LEVER
57	14946200	PLASTIC LEVER CAP

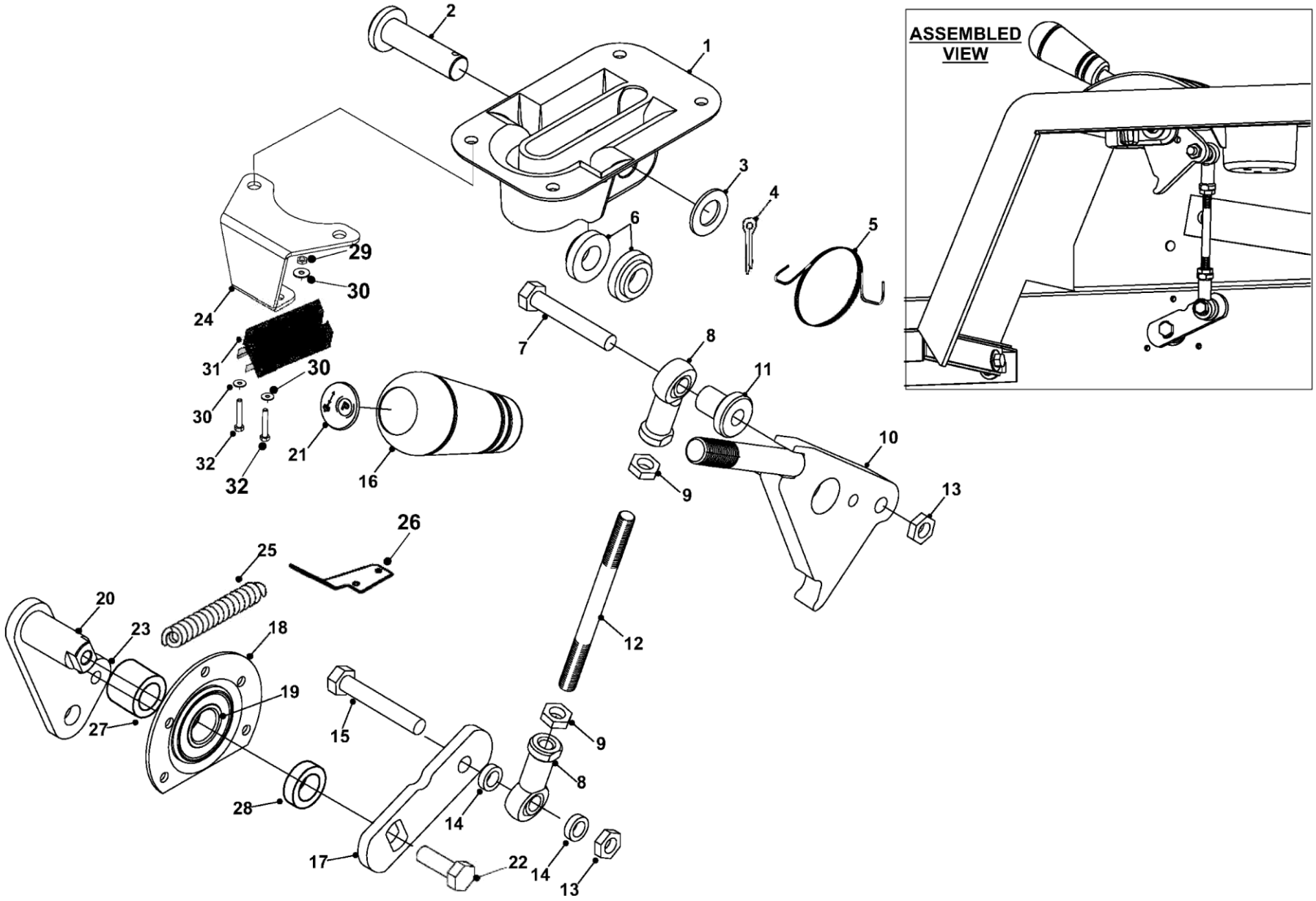
ASSEMBLED VIEW
1
2
3
4
5
6
7
8
9
10
11
12
13
14
15
16
17
18
19
20
21
22
23
24
25
26
27
28
29
30
31
32

1	148014000	C SERIES 2002 HANBRAKE BLOCK
2	31339400	NEW PART NO: 31339401 DECK SWING LIFT PIN
3	088003600	WASHER - M12 X 24 X 1.6
4	06823300	SPLIT PIN 1 X 1/8 (SNOWBLADE)
5	258000600	SPRING -HANDBRAKE BLOCK TORSION 1.75 DIA
6	149498000	C SERIES HANDBRAKE MECHANISM NYLON BUSH
7	018003500	NEW PART NO: 018001800 BOLT
8	10896200	M8 X M8 ROD END R.H.THREAD FEMALE
9	04822300	FULL NUT HEAX M8 Z/P
10	321124301	NEW PART NO: 321124300 HANDBRAKE ASSY
11	18321000	RIDER DECK HANGING BRACKET PIVOT, FRONT
12	313006600	TRACTOR 6 SPEED TRANSA. GEAR ADJUST ROD
13	04920100	M8 NYLOC NUT
14	18303500	SPACER, DECK SWING PLATE
15	01935100	NEW PART NO: 01935700 BOLT COMPRESSOR
16	187185300	NEW PART NO: 149557300 HANDBRAKE HANDLE
17	307196000	HANBRAKE OUTER CONROD CONNECTION PLATE
18	301048100	TRACTOR PEDAL CASSETTE BEARING HOUSING
19	10811600	BEARING (PTO HOUSING)

20	328957000	HANDBRAKE BEARING LINK SHAFT WELDED ASSY
21	359505100	H/BRAKE HANDLE BADGE
22	02826000	BOLT M8 X 25MM
23	02941100	M4 X 25 POZI PAN SCREW BZP
24	301151300	BRAKE SWITCH BRACKET
25	449666602	PSN SENSOR N O STRONG MAGNET GENTECH
26	08952500	NEW PART NO: 01539100 PLT-CLAMPING
27	31330002	ROLLER SHAFT SPACER
28	31306200	PTO END SPACER
29	04826400	M4 NYLOC

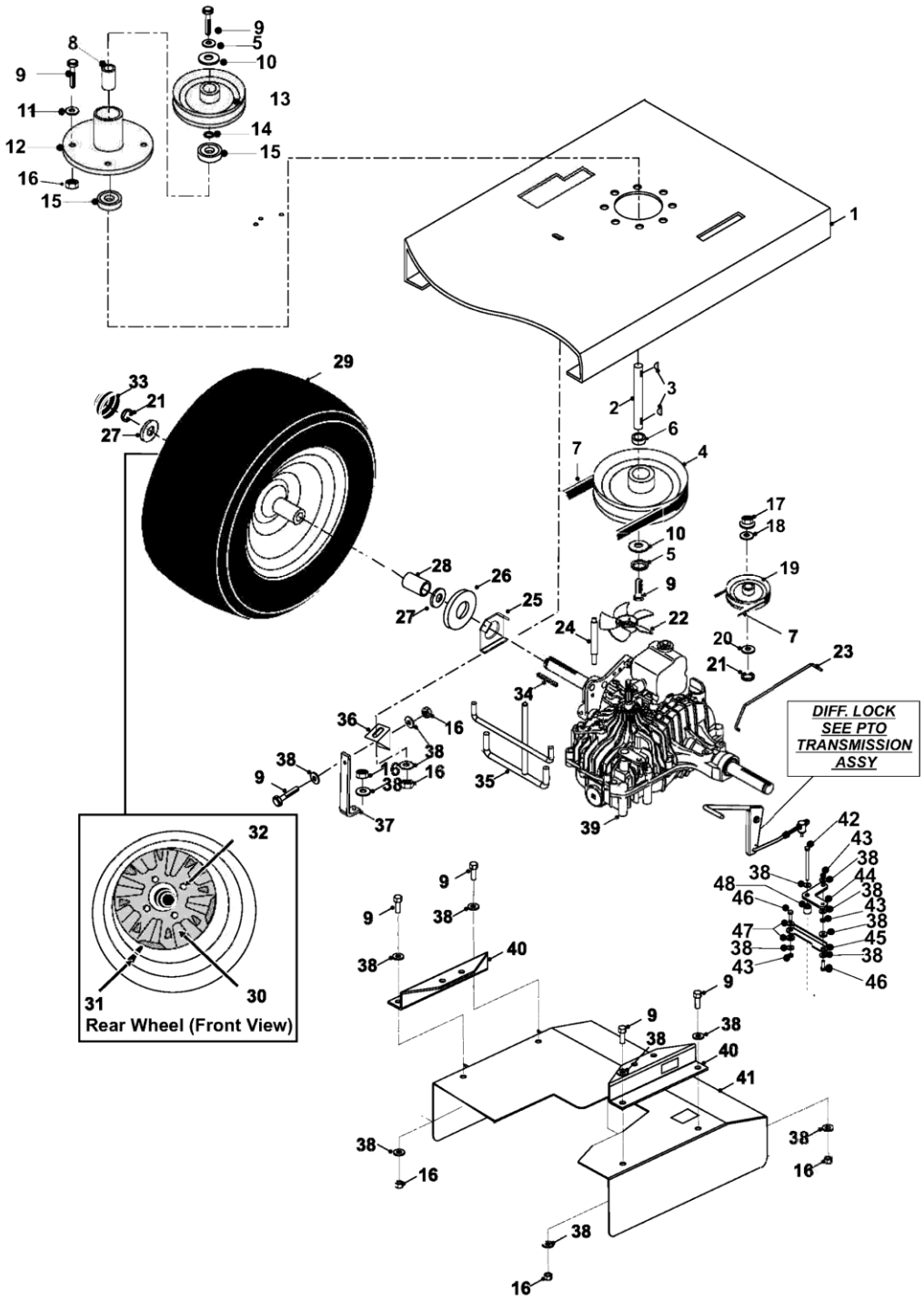
DIFF. LOCK
SEE PTO
TRANSMISSION
ASSY
Rear Wheel (Front View)

1	327006300	20/50 CHASSIS
2	32306000	NEW PART NO: 183013700 DIESEL PTO SHAFT
3	09823900	KEY NO 61
4	20870700	NEW PART NO: 20870702 7” PTO PULLEY
5	088003800	M8 INTERNALLY SERRATED SHAKEPROOF WASHER
6	31306200	PTO END SPACER
7	228001500	NEW PART NO: 228001501 CLUTCHING BELT
8	31334800	SPACER PTO CENTRE
9	02825900	BOLT, M8 X 20MM
10	08819800	WASHER 5/16ID X 1OD HD
11	08819501	NEW PART NO: 08819500 WASHER ZINC PLATED
12	32700300	NEW PART NO: 40835800 PTO BEARING HOUSING COMPLETE
13	208000600	NEW PART NO: 209044600 DECK IDLER PULLEY
14	088002600	ZINC PLATED M16 WASHER FORM B
15	10811600	BEARING (PTO HOUSING)
16	04920100	M8 NYLOC NUT
17	049381600	M10 FLANGED NYLOC NUT
18	089418800	2050 TRANSAXLE FAN WASHER
19	20904400	20/50 HYDROSTATIC BOX PULLEY

20	088002400	WASHER 10.8ID X 20.7OD X 2MM THK
21	078000500	SCARIFIER CIRCLIP
22	148008000	NEW PART NO: 148002900 HYDRO COOLING FAN
23	313010600	20/50 DUMP VALVE ROD
24	313019100	20/50 L/H T/AXLE STEADY ROD
25	307191901	K62 / 66 TRANSAXLE THRUST WASHER
26	089423500	WASHER TRANSAXLE
27	089419000	WASHER 46MM X 25MM ID T/TORQ TRANSAXLE
28	183018501	2050 WHEEL SPACER
29	198000400	20/50 REAR TYRE 23X10.5012NHSTY1223105-0
30	198000500	20/50 REAR RIM ASSY
31	14889200	WHEEL VALVE
32	198001300	20/50 REAR WHEEL HUB
33	14811800	HUB CAP (MOULDED)
34	09830700	KEY,REAR WHEEL
35	327021800	20/50 DOUBLE BELT GUIDE
36	30137700	TORQUE BRACKET
37	292003500	20/50 R/H TRANSAXLE SUPPORT BAR
38	088003700	WASHER - M8 X 21 X 1.6
39	478000400	20/50 K62 TUFF TORQ

40	301119500	20/50 TRANSAXLE GRASS DEFLECTOR BRACKET
41	301119701	NEW PART NO: 301119700 TRANSAXLE DEFLECTOR
42	019478400	BOLT 110MM X M8
43	04822300	FULL NUT HEAX M8 Z/P
44	301119200	20/50 DIFF LOCK PEDAL LINK CRANK
46	02826000	BOLT M8 X 25MM
47	31305100	PTO PLATE SPACER
48	18833702	NEW PART NO: 18833700 PIVOT

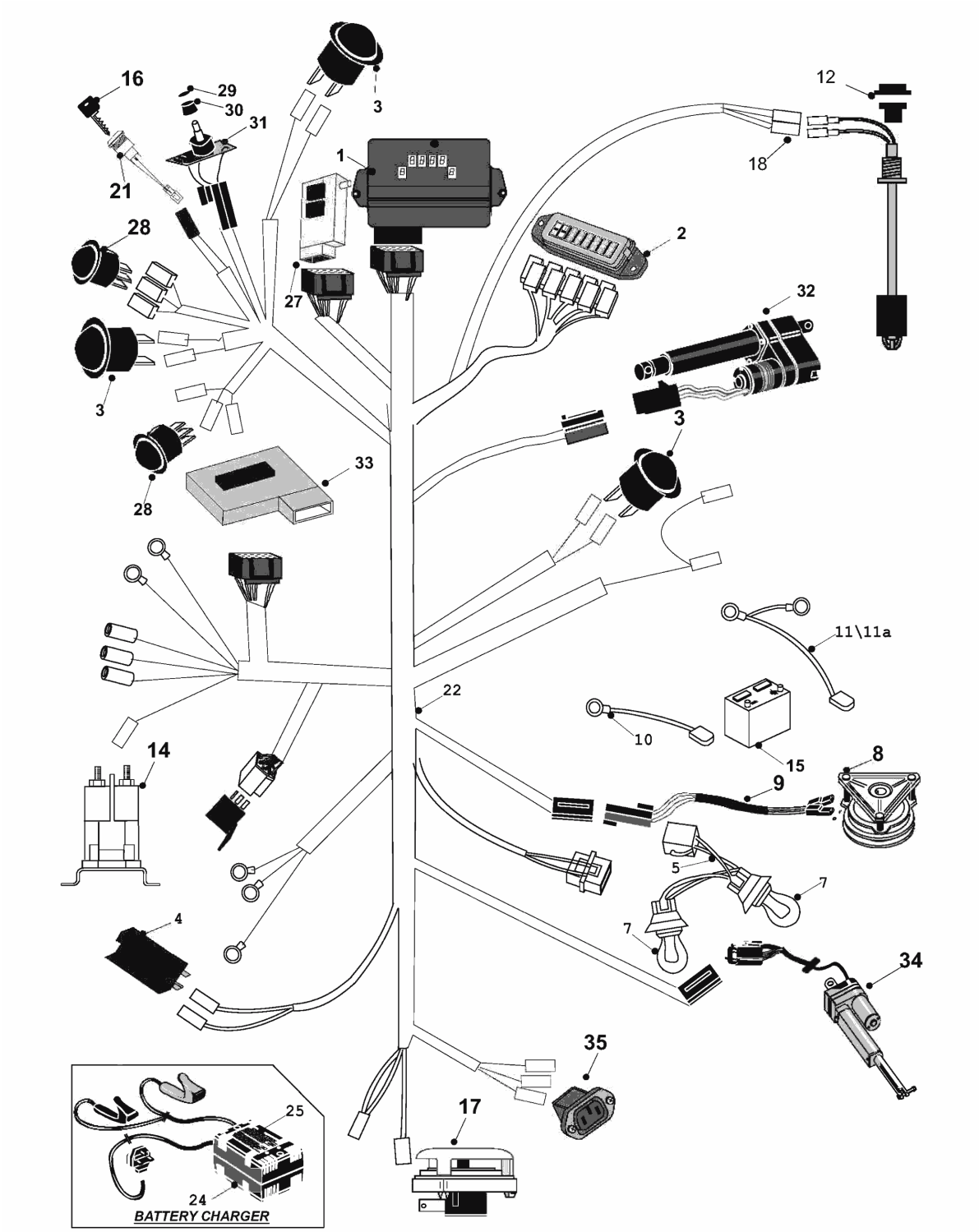
16
29
30
31
3
12
1
18
21
28
2
27
32
3
3
33
28
11\11a
22
10
15
14
8
9
5
7
7
4
34
35
17
25
24
BATTERY CHARGER

1	448017005	CAXW &4WD MAIN PCB C & A 2008 (CU32)
2	301139400	C/X SERIES FUSEBOX HOLDER
3	448008700	NEW PART NO: 449879200 SINGLE POLE ROUND ROCKER
4	449666600	NEW PART NO: 449666602 PSN SENSOR STRONG MAGNET
5	448010400	2003 C-SERIES HEADLIGHT LOOM
7	448008500	BULB - C SERIES 2002 , PY21W
8	44815200	ELECTRIC CLUTCH 20/50
9	44946800	NEW PART NO: 44947500 CLUTCH LOOM WARNER
10	44812602	LEAD BATT TO SOLENOID 2003 (1400033)
11	449662800	SHORT EARTH LEAD
11A	449662900	LONG EARTH LEAD
12	149510900	DISCONTINUED
14	44814801	STARTER SOLENOID
15	458141200	NEW PART NO: 458141201 12V SEALED BATTERY
16	529471700	IGNITION KEY 916
17	44949500	SEAT SWITCH (MILSCO SEAT 97)
18	449665300	FUEL LEVEL SENDER 208MM LONG 16MM HOLE
21	449683300	C SERIES IGNITION SWITCH 2007
22	449872700	HE LOOM 08 (1400108)

24	449562800	OBSOLETE
25	359509300	OBSOLETE
27	448017104	DIAL HEIGHT PCB HIWIN C WW 06 08/04
28	449665600	NEW PART NO: 449879100 DOUBLE POLE ROUND ROCKER SWITCH
29	148011001	COLLET KNOB CAP 31MM DIA (A3231009)
30	148010601	COLLET KNOB 31MM DIA (A3131069)
31	449561501	DIAL HEIGHT SWITCH PCB 04 METAL SWITCH
32	448005800	ACTUATOR WARNER LA10
33	448017200	HE PCB C & A 18 WAY CONNECTOR 2004
34	449664100	X SERIES HIWIN ACTUATOR +
35	448004300	DISCONTINUED

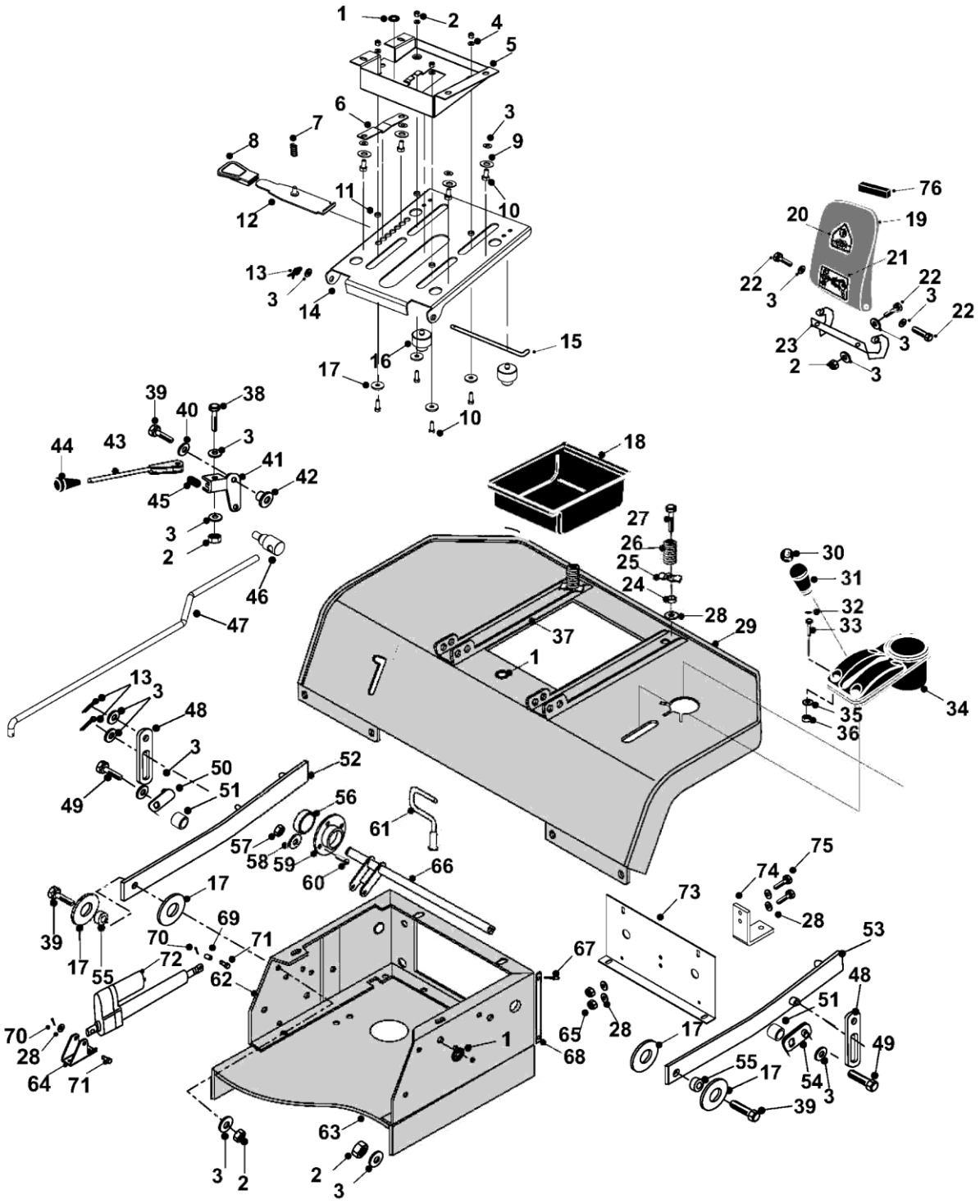
1
2
4
5
6
7
8
3
9
10
11
12
13
3
14
15
16
17
10
76
20
19
21
22
3
22
3
22
23
3
2
3
39
40
38
3
44
43
41
42
45
3
2
46
47
18
27
26
25
24
28
29
30
31
32
33
34
35
36
37
1
13
3
48
3
50
51
49
52
56
61
57
58
59
60
66
17
69
39
70
71
17
55
72
62
67
73
74
75
28
53
48
51
49
70
28
64
71
1
68
65
28
17
55
17
54
3
39
63
3
2
2
3

1	52849700	GROMMET SMALL
2	04920100	M8 NYLOC NUT
3	088003700	WASHER - M8 X 21 X 1.6
4	089423300	OBSOLETE
5	301985401	SEAT BASE PLATE 2008
6	301985700	SEAT MECHANISM SPRING RETAINER PLATE
7	25831100	SPRING
8	149551800	TRACTOR SEAT HANDLE 2008
9	088003800	M8 INTERNALLY SERRATED SHAKEPROOF WASHER
10	028001000	M8 X 16 M/SCREW
12	325000601	OBSOLETE
13	06849100	2MM R CLIP
14	301985503	SEAT RUNNING PLATE 2008
15	31301800	SEAT PIVOT ROD
16	149551900	RUBBER SEAT SPRING RETAINER
17	08925400	M8 X 40 X 3MM HEAVY GUAGE WASHER
18	14848500	TOOL TRAY
19	149496300	PTO FLAP - TRACTOR HE (PLASTIC)
20	35809500	PTO DANGER LABEL
21	35891200	SWEEPER BELT DECAL (SYMBOLS ONLY)

22	02825900	BOLT, M8 X 20MM
23	302005200	A2050 P.T.O. FLAP HINGE
24	31330800	SPACER,(HE C-SERIES SEAT SPRING)
25	27835400	SPRING RETAINING WASHER (SEAT)
26	25858100	SPRING SLIDING SEAT
27	028003400	M10 X 40MM SOCKET CAPSCREW ZINC PLATED
28	088002400	WASHER 10.8ID X 20.7OD X 2MM THK
29	328954600	A2050H REAR BODY WELDED ASSEMBLY
30	359505100	H/BRAKE HANDLE BADGE
31	149555100	NEW PART NO: 149557300 HANDBRAKE HANDLE
32	148014300	M6 SOCKET SCREW CAP
33	018000300	BOLT M6 X 20MM (VAC) (AF037868)
34	148013900	C SERIES 2002 CUP HOLDER
35	089422200	M6 WASHER 6 X 12.5 X 1.6MM BZP
36	04920500	NUT M6 NYLOC
37	301985800	SEAT ATTACHMENT CHANNEL 2008
38	018003200	M8X40MM BRIGHT ZINC PLATE BOLT
39	02941000	BOLT M8 X 45MM (VAC)
40	08819800	WASHER 5/16ID X 1OD HD
41	30134500	NEW PART NO: 405110200 PTO PLATE UPGRADE KIT

42	183027400	C SERIES H/BRAKE CHASSIS JOGGLE PLT BOSS
43	32708702	OBSOLETE
44	14804800	LEVER KNOB
45	25831100	SPRING
46	18318000	RIDER DECK BRAKE TRUNNION
47	313010800	20/50 PTO ROD,**CHECK WITH DS OR DW**
48	30133500	H.E. SWEEPER LIFT PLATE
49	02826000	BOLT M8 X 25MM
50	327171600	RH SWEEP LIFT CROSSBAR CON PL ASY D18/20
51	31323500	H.E LIFT BAR SPACER
52	32720300	H.E. SWEEPER LIFT ARM R/H
53	32721100	H.E. SWEPER LIFT ARM L/H
54	327171700	LH SWEEPER CROSSBAR CON PLATE ASY D18/20
55	31302700	NEW PART NO: 183016900 TRACK ROD END SPACER
56	10811600	BEARING (PTO HOUSING)
57	14885900	OBSOLETE
58	088002800	M5 WASHER FORM C O/D 12.5MM
59	27106600	NEW PART NO: 27106601 BEARING HOUSING
60	019479500	M5 X 16MM FLANG BUTT HD SCKT DRIVE SCREW
61	327012700	5" PULLEY MODIFIED PIG TAIL ASSEMBLY '9

62	327010401	2050 SEAT BOX WELDED ASSEMBLY '98
63	327006300	20/50 CHASSIS
64	302005600	20/50 REAR LIFT ACTUATOR MOUNTING
65	04886100	M10 NYLOC NUT
66	327009400	20/50 SWEEPER LIFT BAR
67	128000100	RIVIT, FOR MULCH DECK LINER
68	301140300	STAINLESS STEEL WEARSTRIP
69	183023500	LA10 FAST LIFT ACTUATOR BUSH
70	06855200	1/8 X 1/2 SPLIT PIN
71	189504800	10MM ACTUATOR PIN
72	448002800	DECK ACTUATOR NET PRICE
73	301041600	20/50 REAR CHASSIS PANEL
74	29200100	NEW PART NO: 29200101 BEARING HOUSING
75	02886000	M10 X 30 S/SCREW BZP
76	148012200	PLASTIC PTO FLAP FOAM STRIP - 14/03/02

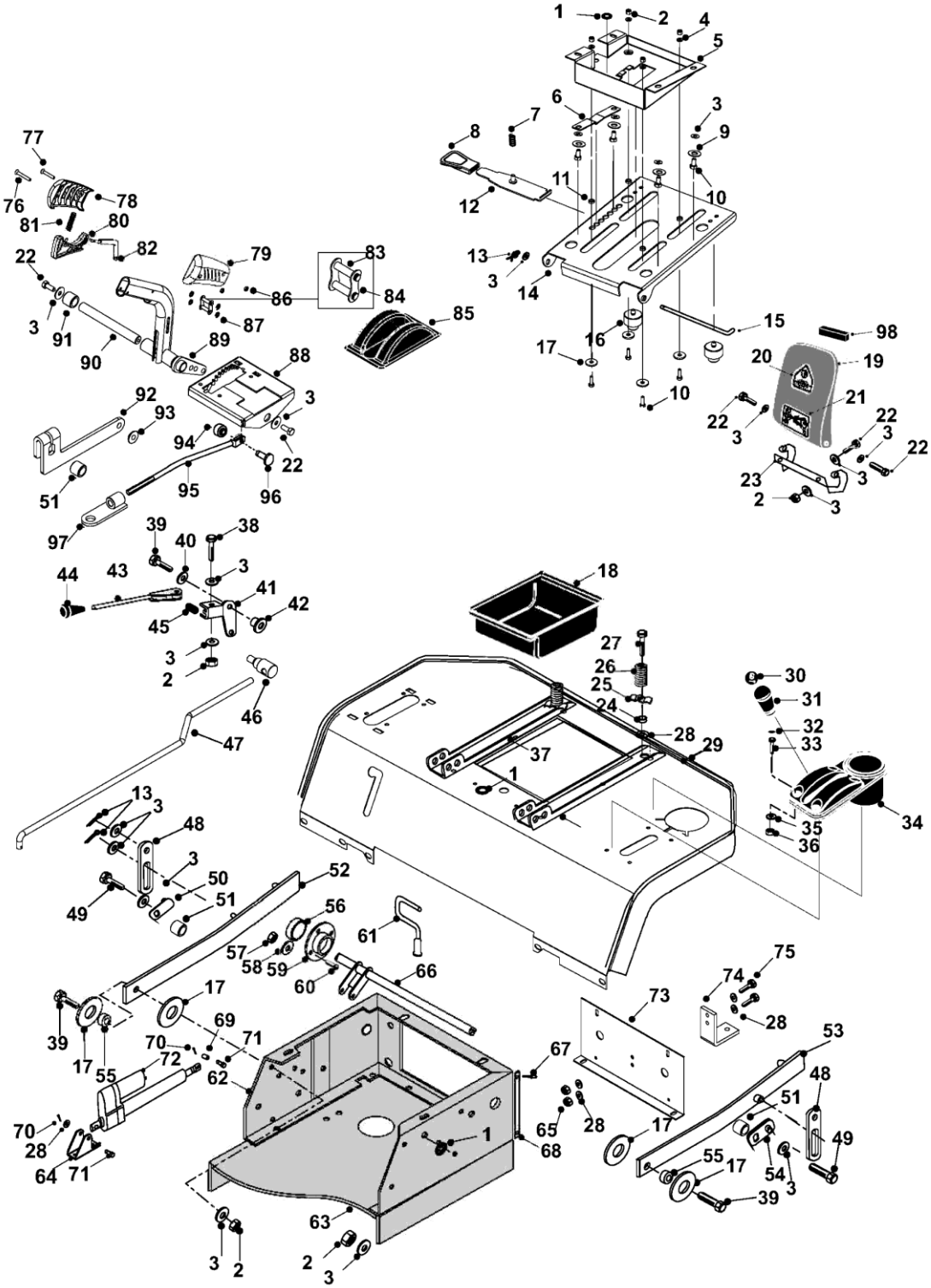
1
2
4
5
6
7
8
3
9
10
11
12
13
3
14
15
16
17
10
98
20
19
21
22
3
22
3
22
23
3
2
3
77
76
78
81
80
82
22
3
91
90
79
83
86
84
87
85
89
88
3
92
93
94
22
51
95
96
97
39
40
38
3
44
43
41
42
45
3
2
46
47
18
27
26
25
24
28
29
37
1
30
31
32
33
34
35
36
13
3
48
3
50
51
49
52
56
61
57
58
59
60
66
17
39
17
55
69
70
71
72
62
67
73
74
75
28
53
48
51
49
70
28
64
71
65
28
17
1
68
55
17
54
3
39
63
3
2
2
3

1	52849700	GROMMET SMALL
2	04920100	M8 NYLOC NUT
3	088003700	WASHER - M8 X 21 X 1.6
4	089423300	OBSOLETE
5	301985401	SEAT BASE PLATE 2008
6	301985700	SEAT MECHANISM SPRING RETAINER PLATE
7	25831100	SPRING
8	149551800	TRACTOR SEAT HANDLE 2008
9	088003800	M8 INTERNALLY SERRATED SHAKEPROOF WASHER
10	028001000	M8 X 16 M/SCREW
11	183856700	SEAT RUNNING PLATE SPACER
12	325000601	OBSOLETE
13	06849100	2MM R CLIP
14	301985503	SEAT RUNNING PLATE 2008
15	31301800	SEAT PIVOT ROD
16	149551900	RUBBER SEAT SPRING RETAINER
17	08925400	M8 X 40 X 3MM HEAVY GUAGE WASHER
18	14848500	TOOL TRAY
19	149496300	PTO FLAP - TRACTOR HE (PLASTIC)
20	35809500	PTO DANGER LABEL

21	35891200	SWEEPER BELT DECAL (SYMBOLS ONLY)
22	02825900	BOLT, M8 X 20MM
23	302005200	A2050 P.T.O. FLAP HINGE
24	31330800	SPACER,(HE C-SERIES SEAT SPRING)
25	27835400	SPRING RETAINING WASHER (SEAT)
26	25858100	SPRING SLIDING SEAT
27	028003400	M10 X 40MM SOCKET CAPSCREW ZINC PLATED
28	088002400	WASHER 10.8ID X 20.7OD X 2MM THK
29	327809500	A,D,K,V REAR BODY ASSEMBLY 08
30	359505100	H/BRAKE HANDLE BADGE
31	149555100	NEW PART NO: 149557300 HANDBRAKE HANDLE
32	148014300	M6 SOCKET SCREW CAP
33	018000300	BOLT M6 X 20MM (VAC) (AF037868)
34	148013900	C SERIES 2002 CUP HOLDER
35	089422200	M6 WASHER 6 X 12.5 X 1.6MM BZP
36	04920500	NUT M6 NYLOC
37	301985800	SEAT ATTACHMENT CHANNEL 2008
38	018003200	M8X40MM BRIGHT ZINC PLATE BOLT
39	02941000	BOLT M8 X 45MM (VAC)
40	08819800	WASHER 5/16ID X 1OD HD

41	30134500	NEW PART NO: 405110200 PTO PLATE UPGRADE KIT
42	183027400	C SERIES H/BRAKE CHASSIS JOGGLE PLT BOSS
43	32708702	OBSOLETE
44	14804800	LEVER KNOB
45	25831100	SPRING
46	18318000	RIDER DECK BRAKE TRUNNION
47	313010800	20/50 PTO ROD,**CHECK WITH DS OR DW**
48	30133500	H.E. SWEEPER LIFT PLATE
49	02826000	BOLT M8 X 25MM
50	327171600	RH SWEEP LIFT CROSSBAR CON PL ASY D18/20
51	31323500	H.E LIFT BAR SPACER
52	32720300	H.E. SWEEPER LIFT ARM R/H
53	32721100	H.E. SWEPER LIFT ARM L/H
54	327171700	LH SWEEPER CROSSBAR CON PLATE ASY D18/20
55	31302700	NEW PART NO: 183016900 TRACK ROD END SPACER
56	10811600	BEARING (PTO HOUSING)
57	14885900	OBSOLETE
58	088002800	M5 WASHER FORM C O/D 12.5MM
59	27106600	NEW PART NO: 27106601 BEARING HOUSING
60	019479500	M5 X 16MM FLANG BUTT HD SCKT DRIVE SCREW

61	327012700	5" PULLEY MODIFIED PIG TAIL ASSEMBLY '9
62	327010401	2050 SEAT BOX WELDED ASSEMBLY '98
63	327006300	20/50 CHASSIS
64	302005600	20/50 REAR LIFT ACTUATOR MOUNTING
65	04886100	M10 NYLOC NUT
66	327009400	20/50 SWEEPER LIFT BAR
67	128000100	RIVIT, FOR MULCH DECK LINER
68	301140300	STAINLESS STEEL WEARSTRIP
69	183023500	LA10 FAST LIFT ACTUATOR BUSH
70	06855200	1/8 X 1/2 SPLIT PIN
71	189504800	10MM ACTUATOR PIN
72	448002800	DECK ACTUATOR NET PRICE
73	301041600	20/50 REAR CHASSIS PANEL
74	29200100	NEW PART NO: 29200101 TOW BRACKET
75	02886000	M10 X 30 S/SCREW BZP
76	029425000	M5 X 35 CSK SOCKET HEAD SCREW BLACK
77	028004000	M5 X 30MM CSK SOCKET HEAD SCREW, BLACK
78	149550400	DECK LIFT RH HANDLE COVER BLACK
79	149550500	DECK LIFT LH HANDLE COVER BLACK
80	149550601	MANUAL DECK LIFT HANDLE TRIGGER

81	259405900	MANUAL DECK LIFT HANDLE SPRING 2008
82	327878100	DECK LIFT HANDLE LINK WELDED ASSEMBLY
83	301965300	MANUAL DECK LIFT SLIDE PLATE
84	183528801	MANUAL DECK LIFT LINK SLIDE PIN
85	149550700	MANUAL DECK LIFT RH REAR BODY COVER
86	048001800	M5 HALF NUT, BLACK FINISH
87	07986100	4MM E-CLIP D1500-4MM
88	327805900	MANUAL DECK LIFT CARRY PLATE WELD ASSM
89	327805801	NEW PART NO: 327805802 DECK LIFT HANDLE
90	183528600	MANUAL DECK LIFT HANDLE CROSS SHAFT
91	183013800	D1850DIESEL PTO SPACER
92	301965400	A/D MANUAL DECK LIFT LOWER LINKAGE ARM
93	183529500	C-SERIES DECK LIFT PIVOT SPACER
94	183025600	C SERIES/WESTWOOD SWEEPER BALL J SPACER
95	328968400	D/K DECK HEIGHT ADJUSTER YOKE ASSEMBLY
96	183528900	NEW PART NO: 313513100 CLEVIS PIN
97	327806100	MANUAL DECK LIFT ADJUSTER ROD PLATE ASSE
98	148012200	PLASTIC PTO FLAP FOAM STRIP - 14/03/02

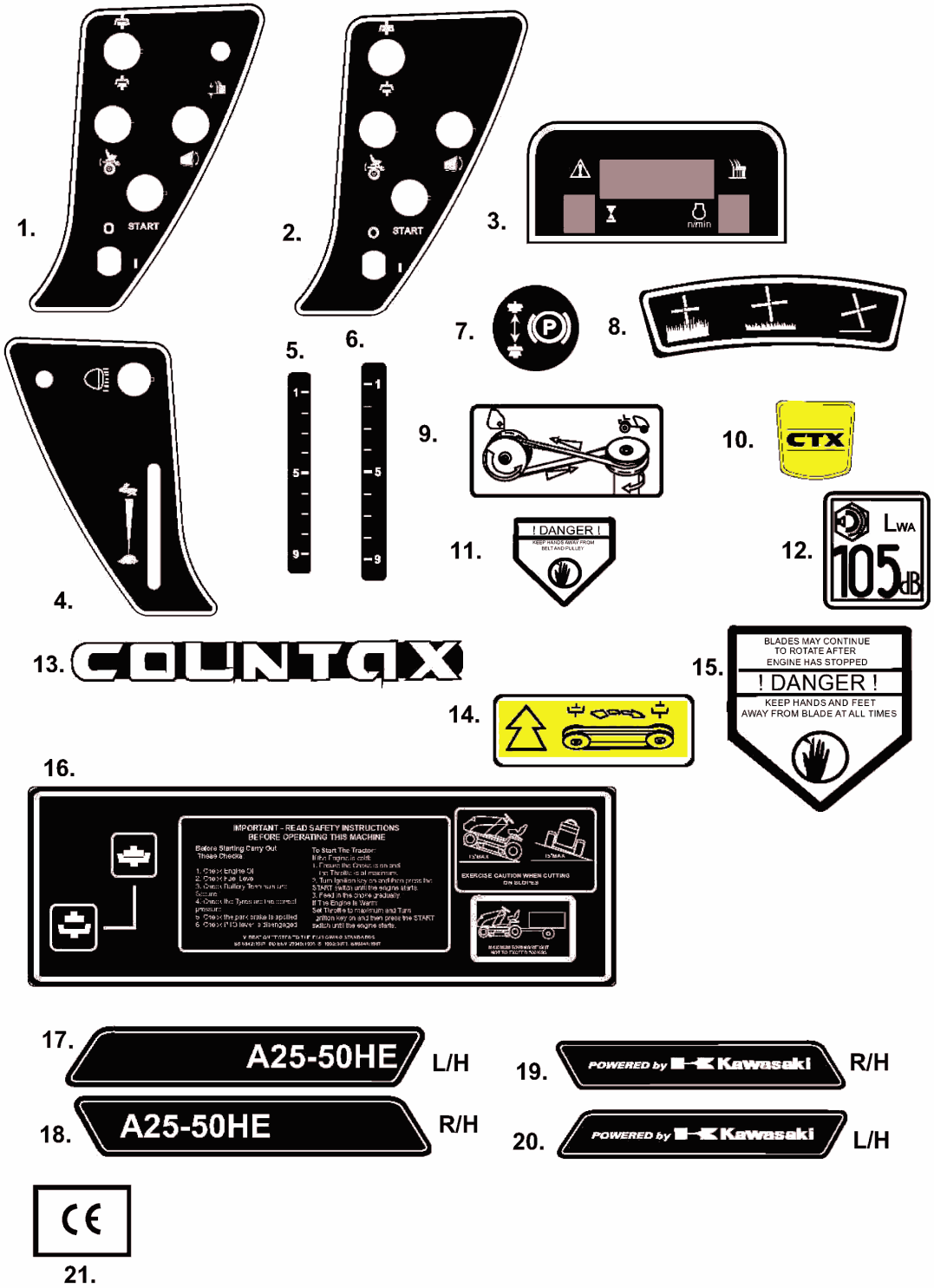
1.
START
2.
START
3.
nvmin
4.
5.
6.
7.
8.
9.
10.
CTX
11.
! DANGER !
12.
LWA
105dB
13.
COUNTAX
14.
15.
BLADES MAY CONTINUE
TO ROTATE AFTER
ENGINE HAS STOPPED
! DANGER !
KEEP HANDS AND FEET
AWAY FROM BLADE AT ALL TIMES
16.
IMPORTANT - READ SAFETY INSTRUCTIONS
BEFORE OPERATING THIS MACHINE
EXERCISE CAUTION WHEN CUTTING
ON BLOCKS
17.
A25-50HE
L/H
18.
A25-50HE
R/H
19.
POWERED by Kawasaki
R/H
20.
POWERED by Kawasaki
L/H
CE
21.

1	359522801	C SERIES RH DASH DECAL STANDARD
3	359523101	C SERIES DASH DISPLAY DECAL 07
4	359522601	C SERIES LH DASH DECAL THROTTLE
5	359524700	DECK LIFT PLASTIC COVER DECAL LH
6	359524800	DECK LIFT PLASTIC COVER DECAL RH
7	359505100	H/BRAKE HANDLE BADGE
8	35937601	SWEEPER HEIGHT DECAL 2003
9	35891200	SWEEPER BELT DECAL (SYMBOLS ONLY)
10	359513400	DISCONTINUED
11	35809500	PTO DANGER LABEL
12	359497101	DECAL 105 DECIBEL - NOV 01
13	359505800	NEW PART NO: 359010100 ALLUMINIUM COUNTAX BADGE
14	35914600	DECK BELT RELEASE DECAL
15	35803300	RIDER DECK DANGER DECAL
16	359550600	25-50 & 20-50 REAR BODY INSTRUC DECAL
17	359541400	A25/50HE KAWASAKI LH SIDE PANEL DECAL
18	359541500	A25/50HE KAWASAKI RH SIDE PANEL DECAL
19	359538800	KAWASAKI RH SIDE PANEL SMALL DECAL
20	359538700	KAWASAKI LH SIDE PANEL SMALL DECAL
21	35912000	CE DECAL